序号No.	产品型号 Product specification	RMC-PV-2.5/6-W-F		RMC-PV-10-W-F
1	可适用端子规格 Applicable terminal	2.5mm²	4/6mm²	10mm²
2	额定电流 Rated current	25A	35A/45A	50A
3	适配电缆导体范围 Cable size range	2.5mm² (14AWG)	4&6mm² (12&10AWG)	10mm² (8AWG)
4	额定电压 Rated voltage	1500V DC		
5	接触电阻 Contact resistance	0.3mΩ MAX		
6	防护等级 Degree of protection	IP68 (1m, 24h)		
7	工作温度/Working temperature	-40℃ ~105℃		
8	污染等级 Class of pollution	Ⅲ级 GradeⅢ		
9	阻燃等级 Flammability	UL94 V-0		

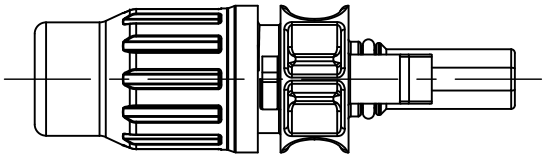

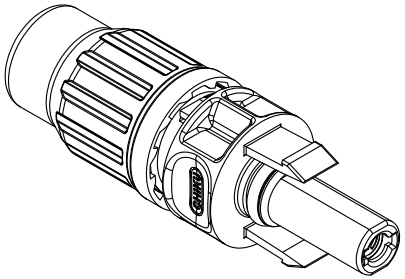

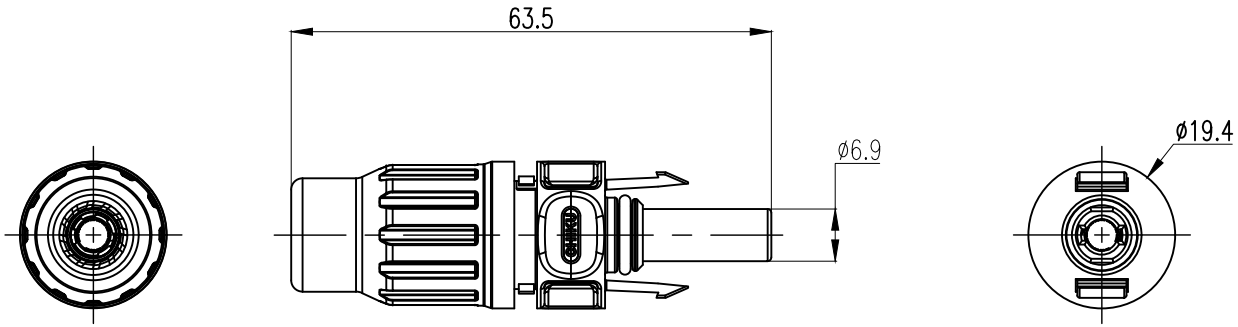

技术要求 Tech. Requirements:

1.符合RoHS标准 Comply with RoHS standards;

2.螺帽扭矩 Torque for the cap screw: 2.5~2.9 N•m.

版本rev.	标记mark	处数no.	变更说明 change description	设计 designed	批准approved	日期date
—	—	—		—	—	—
—	—	—		—	—	—
—	—	—		—	—	—

未注公差参考GB/T1804-c
undefined tol. refer to GB/T1804-c

0--6 mm	±0.2
6--30 mm	±0.3
30--120 mm	±0.5
角度angle	±1°

第三视角 3rd angle projection

设计designed	—	—	
审核checked	—	—	
批准approved	—	—	
材料material	—		
重量WT.(g)	10.8	比例scale	1 : 1
图幅size	A4	页码sheet	1 / 1

江西航同电气科技有限公司
Jiangxi Huntec Electrical Technology Co.,LtD.

产品名称型号 name&spec.	光伏连接器-电缆端-母头 PV conn.-cable side-female
图号 drawing no.	C-4604606007